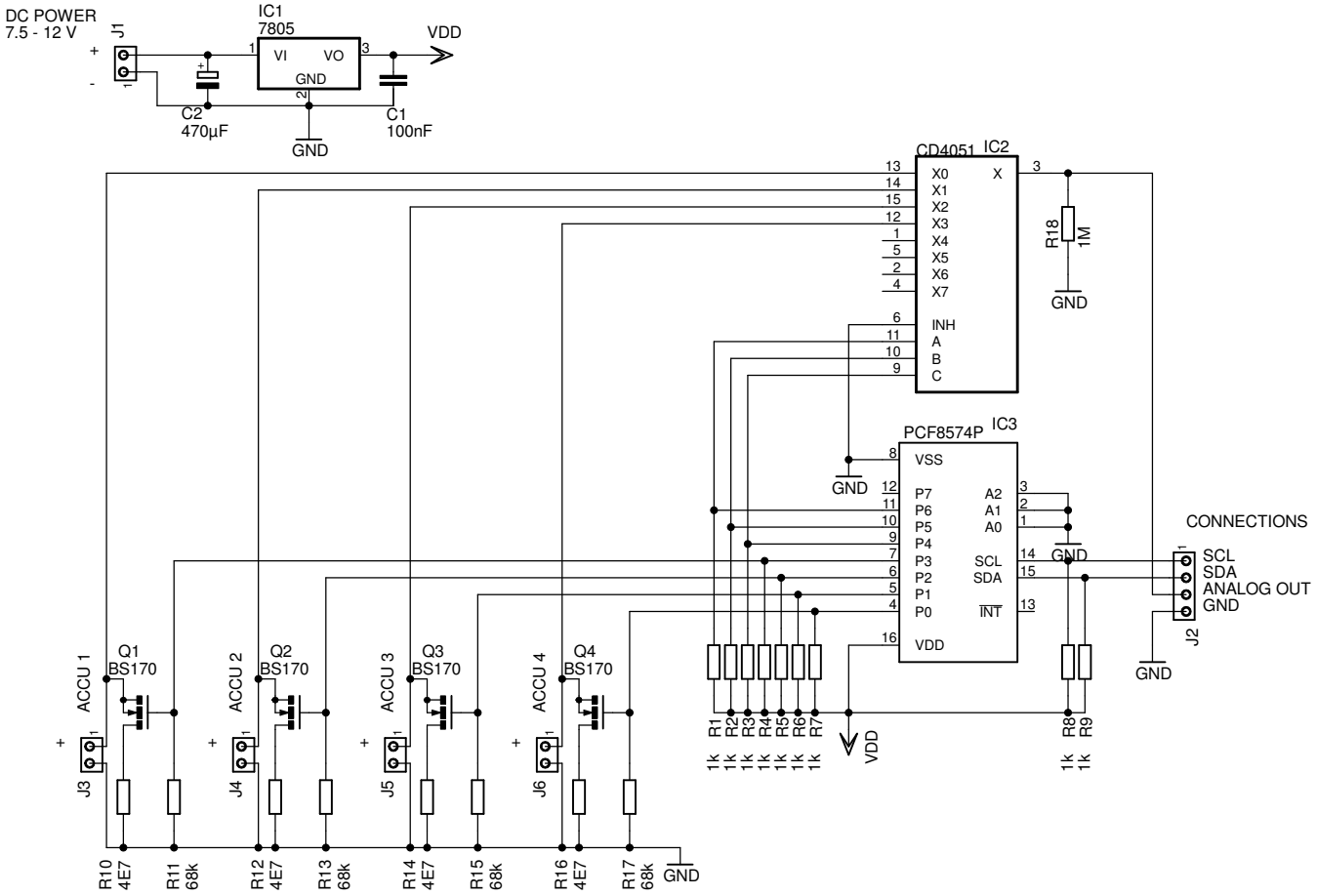

Vanderhaegen Bart

TITLE: battery tester

Document Number: REV:

Date: 17/08/2011 22:43:26 Sheet: 1/1